7. SCHEMATIC DIAGRAM

7-1. MAIN CONTROL

► This Document can not be used without Samsung's authorization.

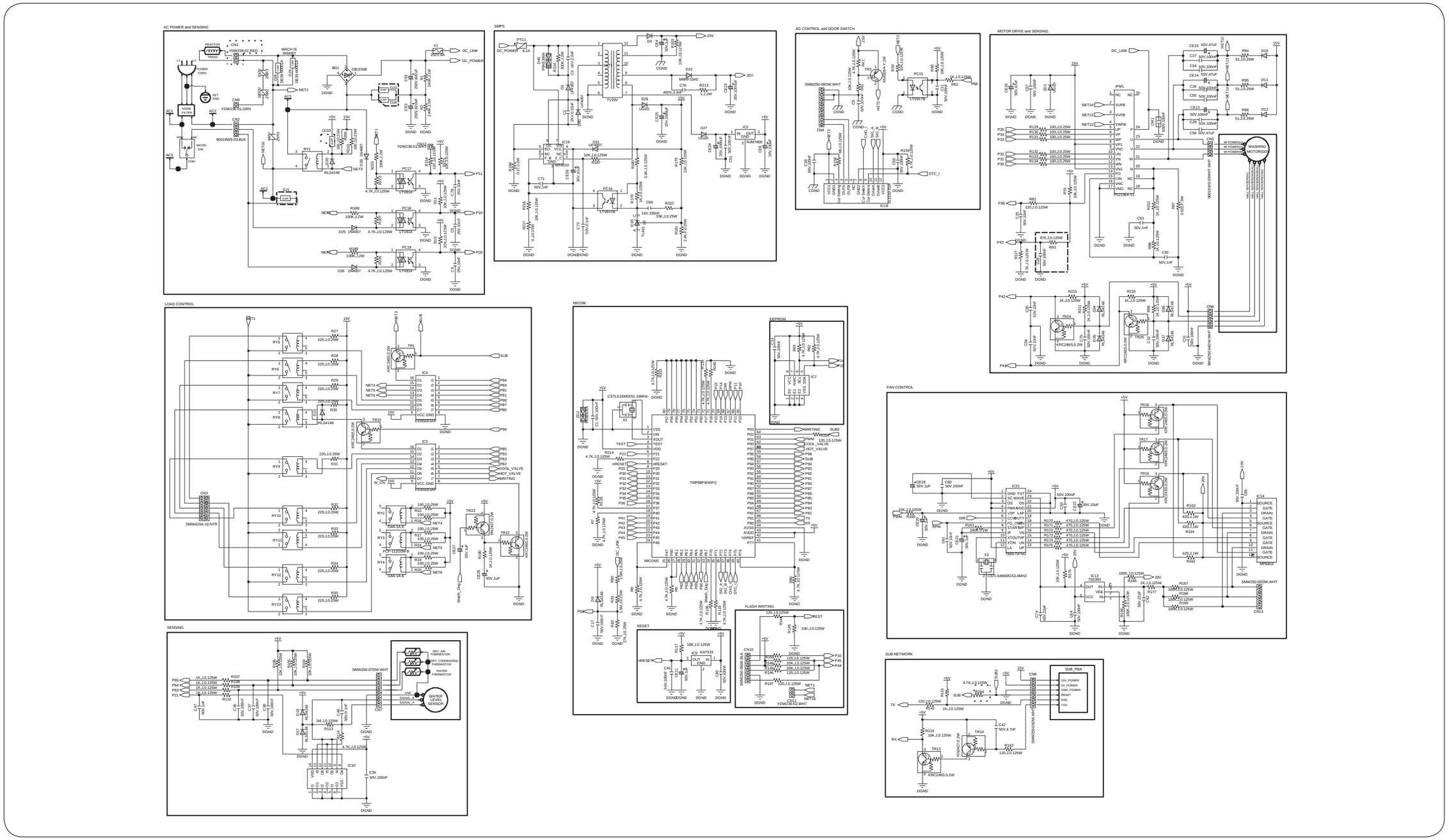

WF419AAW+WF419AAU+WF409SNL.indb 40 2012-07-10 □□ 10:57:05

7-2. SUB CONTROL (BEST : WF419***)

► This Document can not be used without Samsung's authorization.

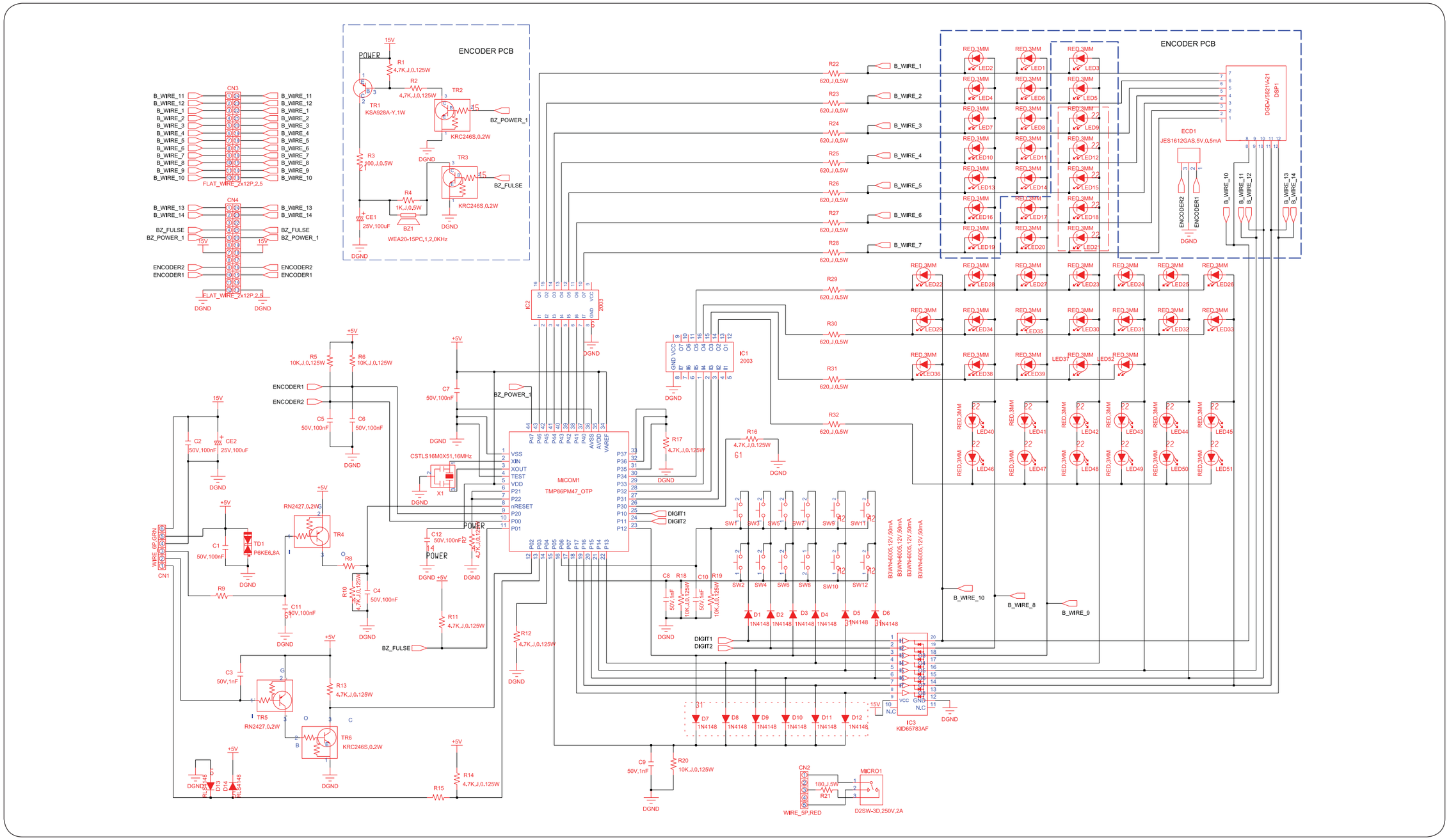

WF419AAW+WF419AAU+WF409SNL.indb 41 2012-07-10 □□ 10:57:06

7-3. SUB CONTROL (BETTER : WF409***)
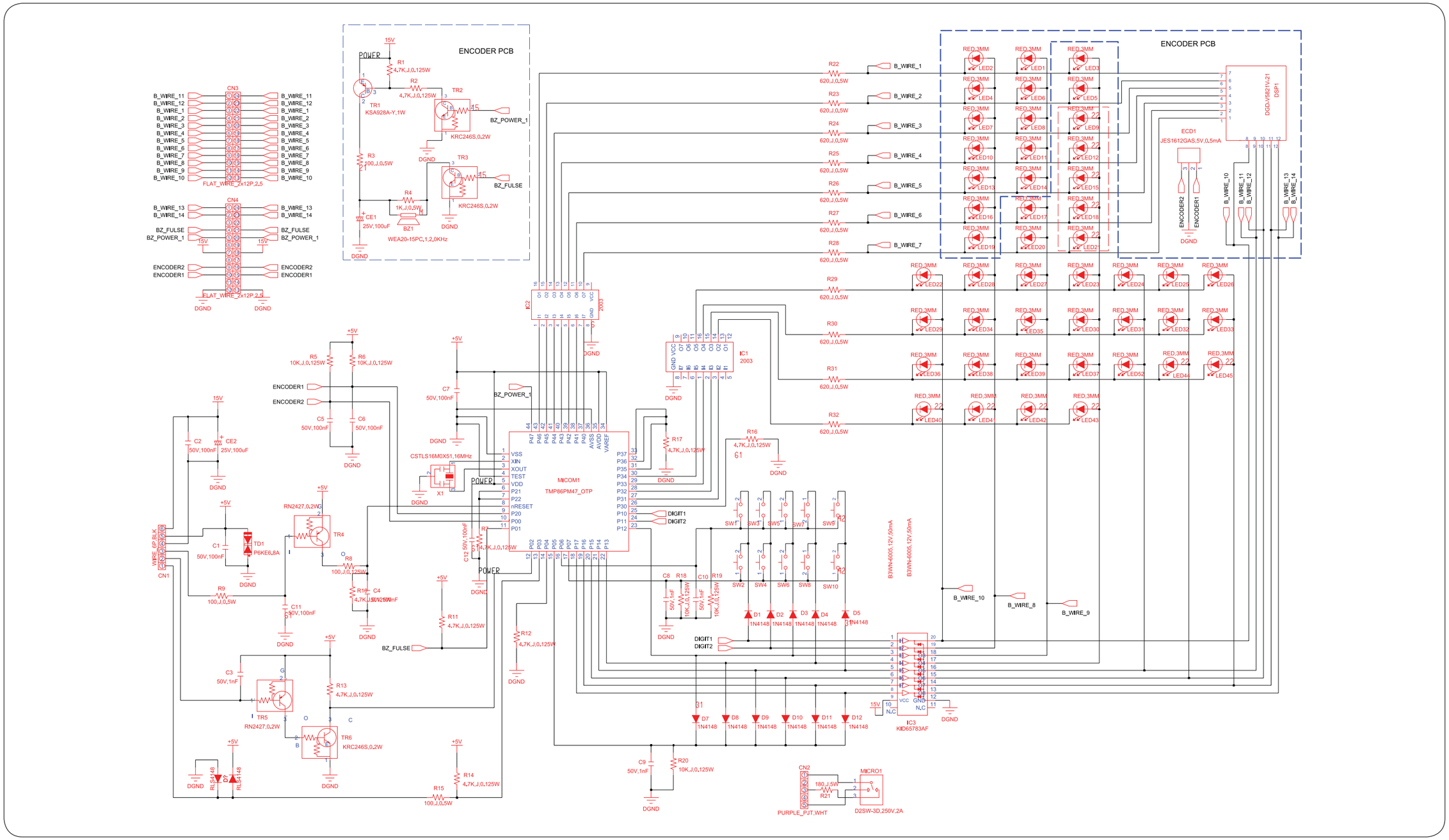
► This Document can not be used without Samsung's authorization.